JANUS

INSTALLATION AND USER MANUAL

Janus Door

Smart cylinder · models C3 and C5

Kubernesys · City Tower 2, Sheikh Zayed Road, Dubai, UAE · info@kubernesys.com

November 2026

Contents

1 Before you start . . . 3
2 Description . . . 3
2.1 Parts and dimensions . . . 3
2.2 In the box . . . 3
3 Technical specifications . . . 4
4 Installation . . . 4
4.1 Choose the spacers . . . 4
4.2 Fit the spacers . . . 5
4.3 Install the battery . . . 6
4.4 Install the cylinder and the knob . . . 6
5 Setting up with the JANUS app . . . 6
5.1 Add the lock . . . 6
5.2 Open with the app . . . 7
5.3 Cards . . . 7
5.4 Codes (C5) . . . 7
5.5 Fingerprints (C5) . . . 7
5.6 E-keys . . . 7
5.7 Records . . . 7
5.8 Gateway (optional) . . . 7
5.9 Auto-lock and passage mode . . . 7
6 Reset to factory settings . . . 7
7 Troubleshooting . . . 8

1 Before you start

Warning Keep the mechanical keys outside the door, so you are never locked out with the keys inside.

Note Replace the battery when the lock warns that it is low.

Note Read this manual before installing the cylinder and keep it for future reference. Resetting the lock to factory settings erases all its data: cards, codes and fingerprints (Section 6).

Janus Door replaces the mechanical cylinder of an existing door and keeps the lock. It opens with the JANUS app over Bluetooth, remotely through the JANUS gateway, with a card on the reader in the knob, or with the mechanical key. The C5 model adds a keypad for codes and a fingerprint reader.

	C3	C5
Opens with	App, card, mechanical key, remote through the gateway	App, card, code, fingerprint, mechanical key, remote through the gateway
Battery	1 × CR2 (3 V)	1 × CR123A (3 V)

2 Description

2.1 Parts and dimensions

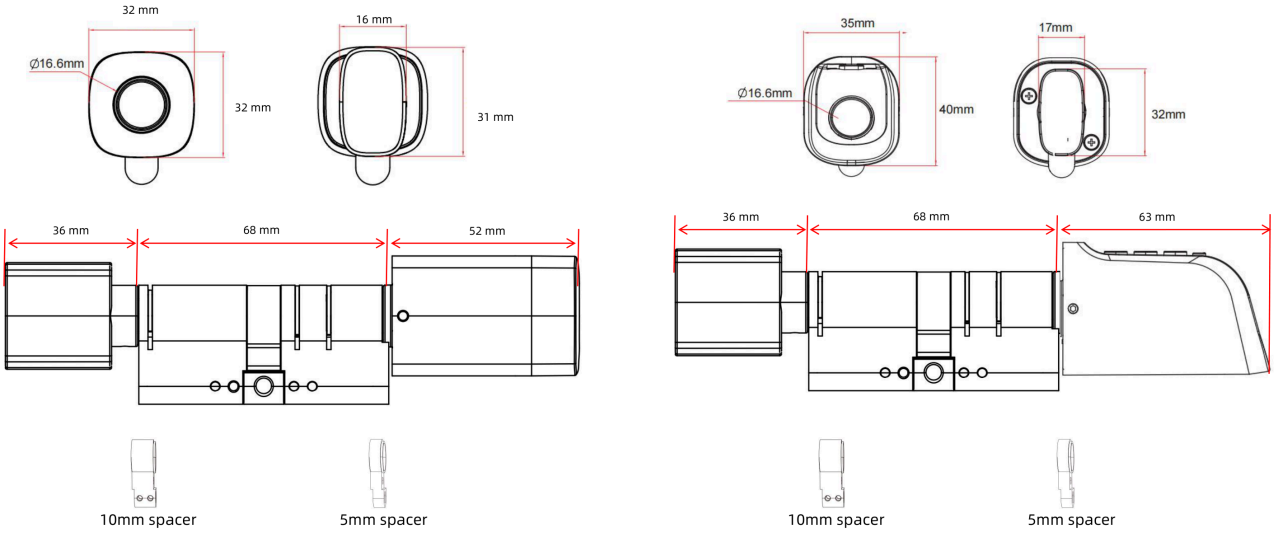

C3 C5

The outer knob holds the electronics and the battery. The cylinder body is 68 mm long without spacers; 5 mm and 10 mm spacers extend it on either side for thicker doors (Section 4.1).

2.2 In the box

Part	Qty	Part	Qty
Front panel (outer knob)	1	KM3 × 22 mm screw	2
Back panel (inner knob)	1	5 mm spacer	2
Card	3	10 mm spacer	2
Mechanical key	2	M3 × 4 mm screw	2
This manual	1	L-shaped hex wrench	1

3 Technical specifications

Feature	Specification
Doors	Aluminium and wooden doors
Locks	European mortise locks, 72 and 85 series
Door thickness	35 to 75 mm, with the spacers included
Material	Zinc alloy
Battery	C3: 1 × CR2 (3 V). C5: 1 × CR123A (3 V)
Low-battery warning	Below 2.4 V
Opening	JANUS app over Bluetooth, card, mechanical key, remote through the JANUS gateway. C5: also code and fingerprint
Capacity	C3: 200 cards. C5: 200 cards, 150 codes and 200 fingerprints
Bluetooth range	Up to 5 m, with no walls or obstacles in between
Codes (C5)	4 to 9 digits. After 5 wrong codes in a row, the keypad locks for 90 seconds
Humidity	0 to 95 %

4 Installation

4.1 Choose the spacers

Choose the spacers by the thickness of the door. The knob screw can go in position A, B, C or D, 7.5 mm apart (AB = BC = CD = 7.5 mm). Without spacers the cylinder is 68 mm long (EF), 34 mm on each side of the cam (EG = GF).

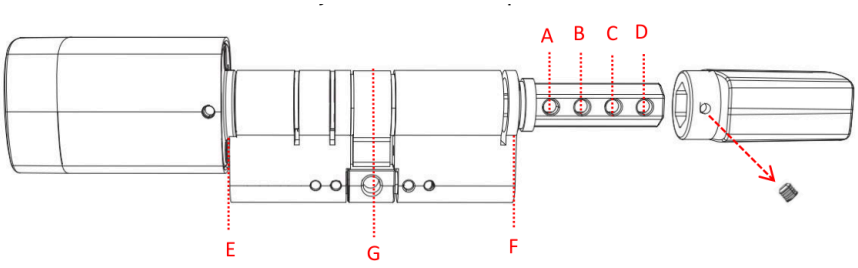

AB=7.5mm BC=7.5mm CD=7.5mm EF=68mm EG=GF=34mm

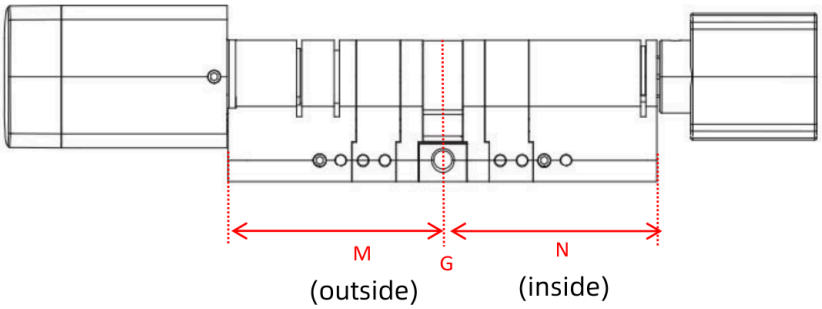

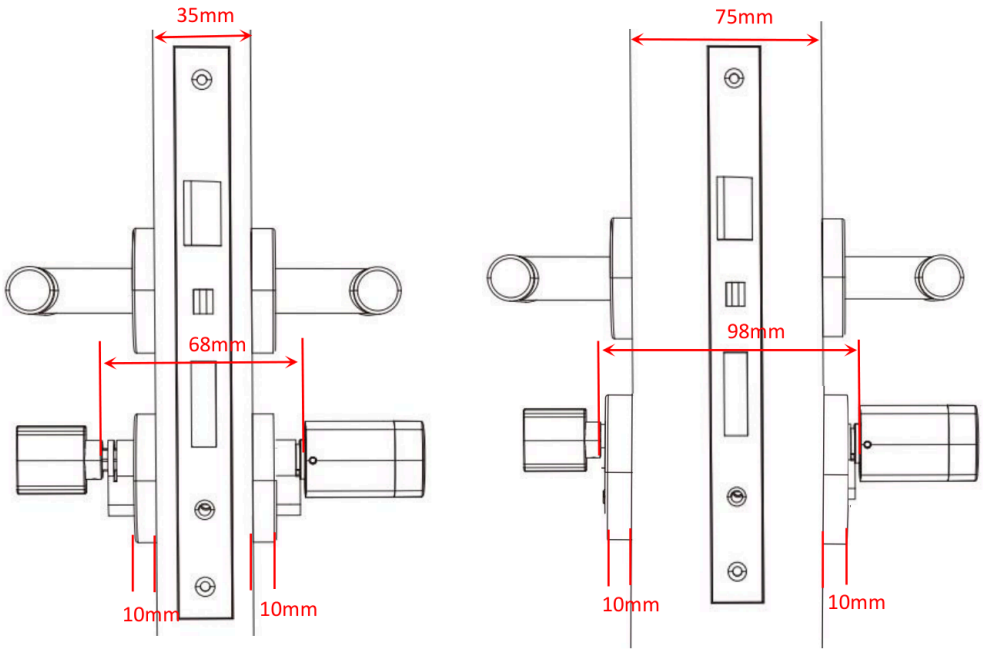

Left: a 35 mm door, no spacers. Right: a 75 mm door, two 10 mm and two 5 mm spacers. M is the outside length, N the inside length.

Door thickness, with escutcheon	Door thickness, without escutcheon	M, outside	N, inside
35–45 mm	55–65 mm	34 mm, no spacers	34 mm, no spacers
46–55 mm	66–75 mm	39 mm, one 5 mm spacer	39 mm, one 5 mm spacer
56–65 mm	76–85 mm	44 mm, one 10 mm spacer	44 mm, one 10 mm spacer
66–75 mm	86–95 mm	49 mm, one 10 mm and one 5 mm spacer	49 mm, one 10 mm and one 5 mm spacer

4.2 Fit the spacers

1. Remove the knob screw and the cylinder screw.
2. Fit the 5 mm and 10 mm spacers, the stub and the screws, so that the cylinder length matches the door thickness.

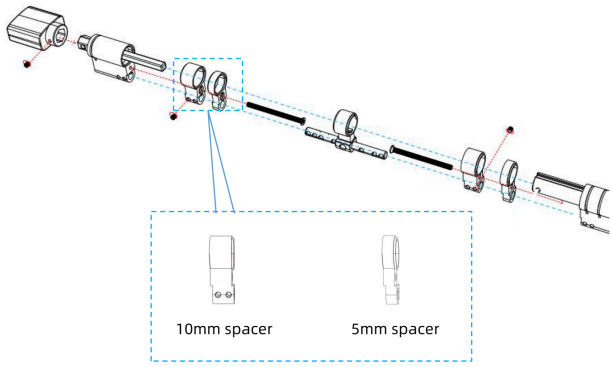

C3

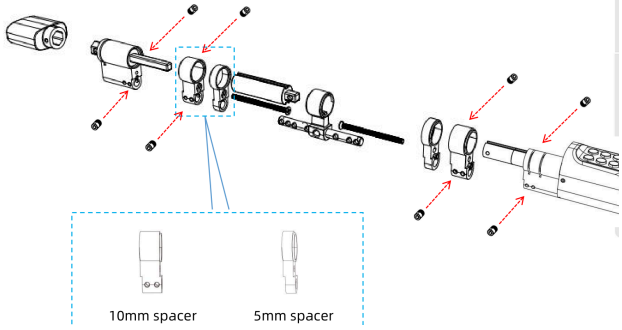

C5

4.3 Install the battery

1. Remove the knob screw.
2. Remove the 2 screws of the exterior assembly.
3. Insert the battery: 1 × CR2 in the C3, 1 × CR123A in the C5.
4. Refit the 2 screws of the exterior assembly.

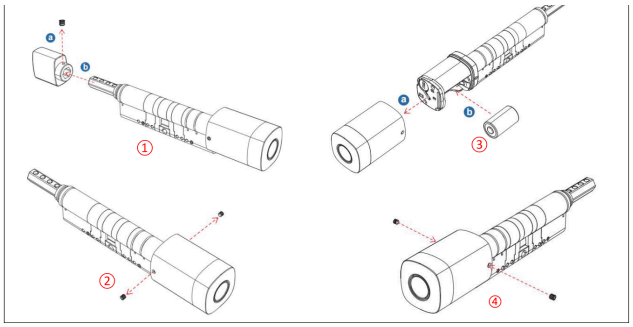

C3

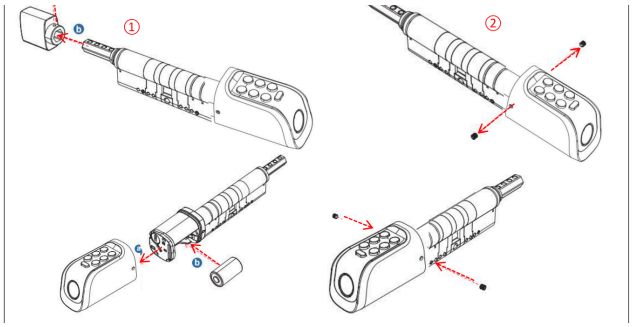

C5

4.4 Install the cylinder and the knob

1. Slide the cylinder into the lock and fit the cylinder screw.
2. Fit the inner knob and its screw.

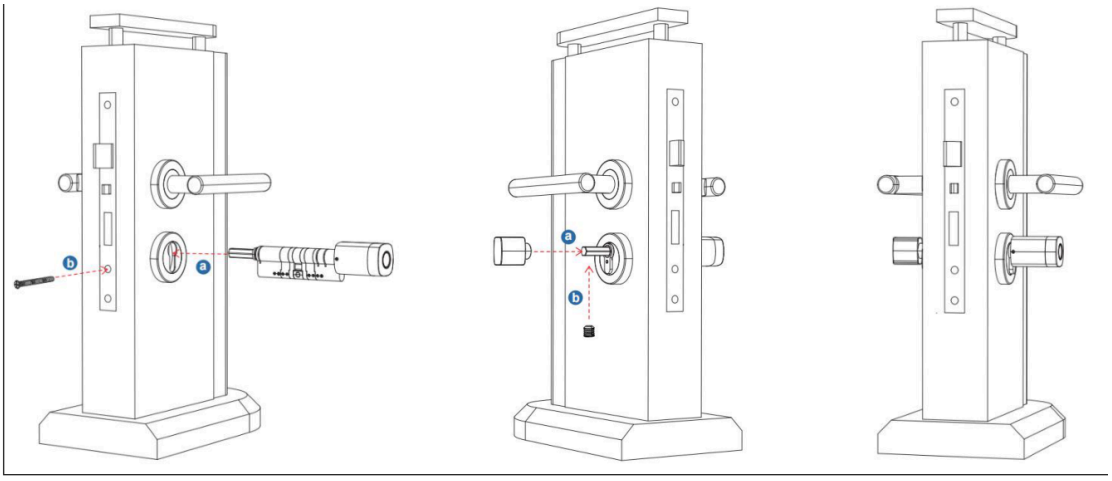

C3. The C5 is installed the same way.

5 Setting up with the JANUS app

5.1 Add the lock

1. Turn on Bluetooth on your phone.
2. In the JANUS app, add a lock.

3. Touch the lock to wake it up.
4. When the lock appears on the phone, select it and give it a name.

A lock that is already added must be reset (Section 6) before it can be added again. If the lock does not appear, close the app and turn Bluetooth off and on, then repeat the steps.

5.2 Open with the app

With a valid e-key, open the lock from the app over Bluetooth. Stay within 5 m of the lock, with no walls or obstacles in between.

5.3 Cards

Cards are added from the app, standing next to the lock. Each card can be permanent, timed or recurring.

5.4 Codes (C5)

Enter the code on the keypad and press the unlock key in the lower-right corner. Codes can be permanent, timed, one-time, recurring or custom; they can be shared with other users.

- A custom code has 4 to 9 digits and can be set over Bluetooth or remotely.
- Timed, recurring and permanent codes must be used at least once within 24 hours of their start; otherwise they are suspended for security.
- A one-time code must be used within 6 hours and works only once.

5.5 Fingerprints (C5)

Fingerprints are added from the app, standing next to the lock. Each fingerprint can be permanent, timed or recurring, and its validity can be changed later.

> **Warning** A **duress fingerprint** opens the door and sends an alarm to the administrators. Use it only if someone forces you to open the door, never every day. The lock must be online (connected to a gateway) for the alarm to be sent.

5.6 E-keys

Send an e-key to another user of the JANUS app to let them open the lock. An e-key can be timed, permanent, one-time or recurring; you can allow or refuse remote opening and make the user an administrator. The e-key manager can delete, reset, send and adjust e-keys, and see the lock's records.

5.7 Records

The app shows the lock's opening records. Openings with a card, code or fingerprint reach the app in real time only when the lock is online, through a gateway. Only a certain period is kept; export the records to keep the history.

5.8 Gateway (optional)

The lock talks to the phone over Bluetooth only, so it is not exposed to the network. The JANUS gateway connects the locks to the Wi-Fi network: through it you can open remotely, check and set the lock's clock, read the records, and change codes and e-keys remotely.

1. Plug in the gateway. Its light flashes red and blue in turn.
2. Turn on Bluetooth on your phone and add the gateway in the JANUS app.
3. After a short time, the app shows the locks within the gateway's range. Once a lock is bound to the gateway, it can be managed through it.
4. To open remotely, turn on Remote unlock in the lock's settings.

5.9 Auto-lock and passage mode

- **Auto-lock** locks the door again after the time you set.
- **Passage mode** keeps the door unlocked. It takes effect after the next opening with any method.

6 Reset to factory settings

> **Warning** Resetting erases all the lock's data: cards, codes, fingerprints and its link to the app.

1. Remove the screw that covers the reset button.
2. Press and hold the reset button for 5 seconds, until the light glows blue.

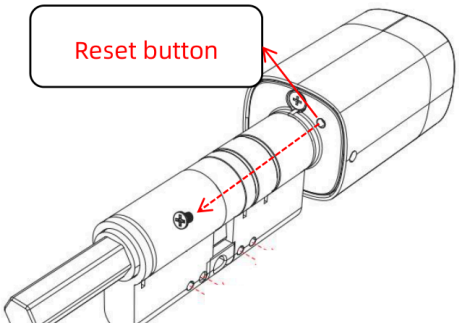

C3

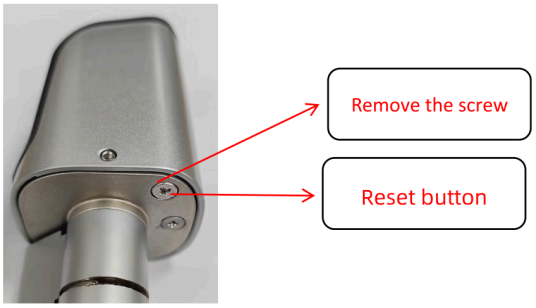

C5

7 Troubleshooting

The lock does not respond after installation
Check that the battery is the right way round and has enough charge. Remove the back panel and check that it is connected. If it still does not respond, remove the lock and check that the wires of the lock body are not pinched, then refit them.

A fingerprint cannot be added (C5)
Check the finger for dirt or wear, and the fingerprint reader for dirt or grease. Press the reader to check that it responds.

The battery runs down fast
Possible causes are a high standby consumption or a short circuit.

The outside handle does not open, although the code or card is accepted, the motor runs, and the door opens from the inside
The triangle on the clutch may be in the wrong direction: check and correct it.

The door does not open in passage mode
Open the lock once with any method; passage mode takes effect after that.

The keypad does not accept codes (C5)
After 5 wrong codes in a row, the keypad locks for 90 seconds.

Openings are missing from the records
The lock is not online, so card, code and fingerprint openings are not uploaded in real time; or the records are older than the period kept.