JANUS

INSTALLATION AND USER MANUAL

Janus Retrofit

Key turner · model T32

Kubernesys · City Tower 2, Sheikh Zayed Road, Dubai, UAE · info@kubernesys.com

November 2026

Contents

1 Before you start . . . 3
2 Description . . . 3
2.1 Parts and dimensions . . . 3
2.2 In the box . . . 3
3 Technical specifications . . . 4
4 Opening the door . . . 4
4.1 From the outside . . . 4
4.2 From the inside . . . 4
5 Installation . . . 4
5.1 Step 1: install the mortise lock . . . 4
5.2 Step 2: install the cylinder and the batteries . . . 4
5.3 Step 3: install the turner . . . 5
5.4 Step 4: fix the turner . . . 6
5.5 Door opening direction . . . 6
6 Setting up with the JANUS app . . . 6
6.1 Add the lock . . . 6
6.2 Open with the app . . . 6
6.3 E-keys . . . 6
6.4 Records . . . 6
6.5 Latch bolt settings . . . 6
6.6 Auto-lock and passage mode . . . 6
6.7 Gateway (optional) . . . 7
7 Reset to factory settings . . . 7
8 Troubleshooting . . . 7

1 Before you start

Warning Keep the mechanical keys outside the door, so you are never locked out with the keys inside.

Note Replace the batteries when the lock warns that they are low.

Note Read this manual before installing and keep it for future reference. Resetting to factory settings erases all the lock's data (Section 7).

Janus Retrofit fits on the inside of the door, over the key or the thumb turn of the cylinder you already have, and turns it with a motor. The outside of the door stays as it is: it still opens with its mechanical key.

2 Description

2.1 Parts and dimensions

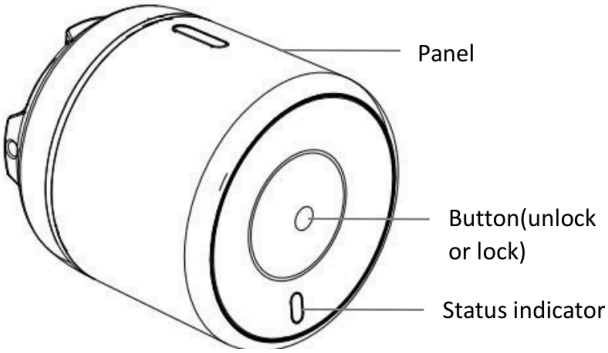

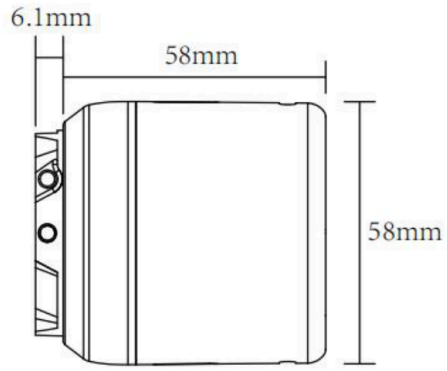

The panel turns by hand; the button in its centre locks or unlocks; the status light is below it. Ø 58 mm, 58 mm deep plus 6.1 mm for the base.

2.2 In the box

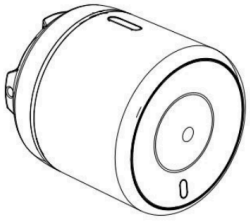

T32*1

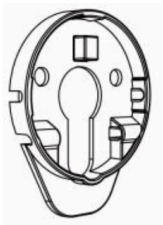

Mounting Plate*1(option)



Hex Screw Driver*1



T32, mounting plate (depending on the installation), hex screwdriver and 5 adapters.

3 Technical specifications

Feature	Specification
Doors	Aluminium and wooden doors
Locks	European mortise locks, 72 and 85 series, and Nordic lock bodies
Door thickness	Any
Material	Aluminium alloy
Size	Ø 58 × 64 mm
Weight	About 0.5 kg
Battery	3 × CR123A (9 V)
Low-battery warning	Below 7.2 V
Opening	Outside: JANUS app over Bluetooth, mechanical key, remote through the JANUS gateway. Inside: button, or the panel turned by hand
Bluetooth range	Up to 5 m, with no walls or obstacles in between
Colours	Black or silver
Humidity	0 to 95 %

4 Opening the door

4.1 From the outside

- **With the app.** Turn on Bluetooth and open the lock from the JANUS app.
- **With the mechanical key.** Insert the key into the cylinder and turn it 90° anticlockwise.

4.2 From the inside

- **Button.** Press the button in the centre of the panel: the lock unlocks or locks.
- **By hand.** Grip the panel and turn it 90° to unlock.

5 Installation

5.1 Step 1: install the mortise lock

Fit the mortise lock and its screws, if it is not already in the door.

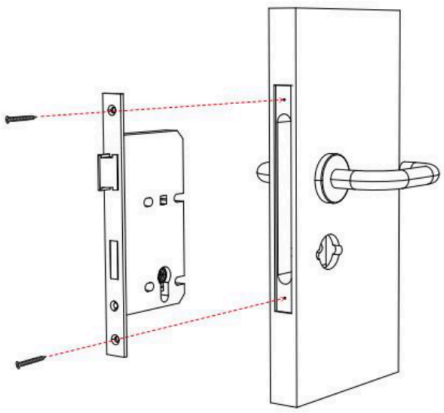

5.2 Step 2: install the cylinder and the batteries

1. Fit the lock cylinder and its screw.
2. Insert the three CR123A batteries into the T32.

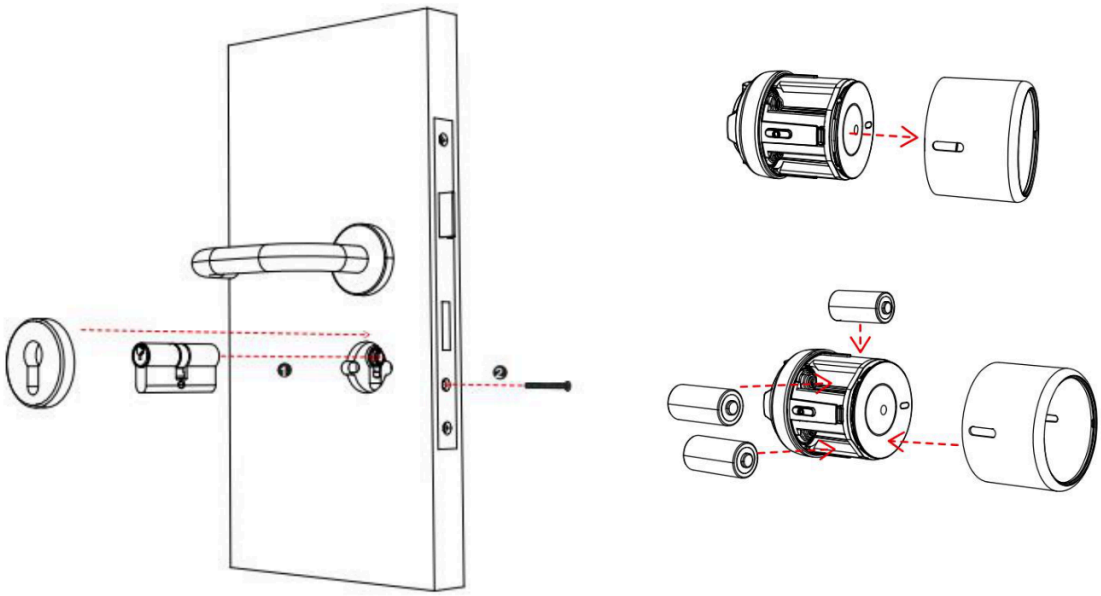

5.3 Step 3: install the turner

Janus Retrofit turns either the key, left in the cylinder on the inside of the door, or the cylinder's own thumb turn. How it is mounted depends on how far the cylinder sticks out from the door panel.

5.3.1 Over the key

1. Insert the key in the cylinder, on the inside of the door. Keep the key vertical.
2. If the cylinder sticks out less than 4 mm, fit the mounting plate first; otherwise, mount the turner directly.
3. Install the turner over the key.

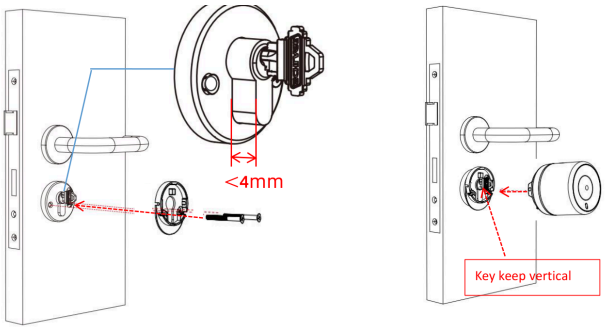

Cylinder sticking out less than 4 mm: with the mounting plate

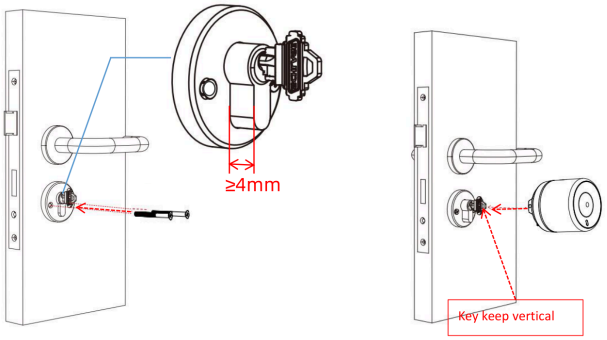

Cylinder sticking out 4 mm or more: without the plate

5.3.2 Over the thumb turn

1. Remove the knob of the thumb turn.
2. Fit the matching adapter and fix it with its screw. Keep it vertical.
3. If the cylinder sticks out less than 4 mm, fit the mounting plate first; otherwise, mount the turner directly.
4. Install the turner over the adapter.

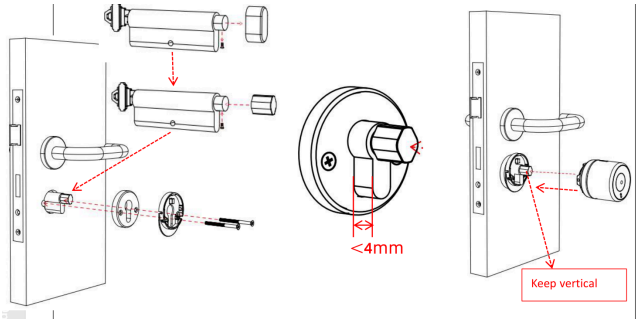

Less than 4 mm: with the mounting plate

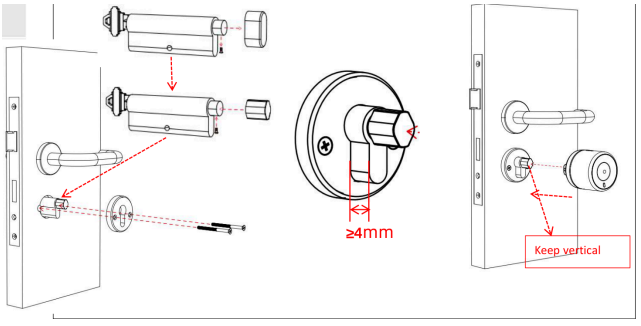

4 mm or more: without the plate

5.4 Step 4: fix the turner

Fix the turner with its screws.

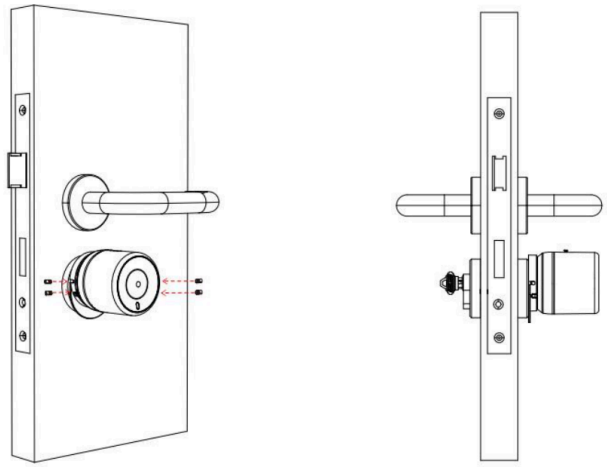

5.5 Door opening direction

If the lock locks when it should unlock, or the other way round, set the door's opening direction in the lock's settings in the JANUS app.

6 Setting up with the JANUS app

6.1 Add the lock

1. Close the door.
2. Turn on Bluetooth on your phone.
3. In the JANUS app, add a lock.
4. Touch the lock to wake it up.
5. When the lock appears on the phone, select it and give it a name.
6. Start the calibration: the lock learns its open and closed positions on its own.

A lock that is already added must be reset (Section 7) before it can be added again. If the lock does not appear, close the app and turn Bluetooth off and on, then repeat the steps.

6.2 Open with the app

With a valid e-key, open the lock from the app over Bluetooth. Stay within 5 m of the lock, with no walls or obstacles in between.

6.3 E-keys

Send an e-key to another user of the JANUS app to let them open the lock. An e-key can be timed, permanent, one-time or recurring; you can allow or refuse remote opening and make the user an administrator.

6.4 Records

The app shows the lock's opening records: up to 500, kept for six months.

6.5 Latch bolt settings

- **Latch bolt control.** When it is on, unlocking also pulls back the latch bolt; when it is off, the latch bolt is not moved. If the latch bolt does not retract when the door is opened with the key, the lock cannot control it.
- **Holding time.** How long the latch bolt is held back: 2 to 9 seconds. The shorter it is, the faster the opening.
- **Rotation distance.** How far the latch bolt is pulled back: level 1 to 20. The higher the level, the further it moves.

6.6 Auto-lock and passage mode

- **Auto-lock** locks the door again after the time you set.
- **Passage mode** keeps the door unlocked. It takes effect after the next opening with any method.

6.7 Gateway (optional)

With a JANUS gateway, the lock can be opened and managed remotely from the app.

7 Reset to factory settings

Warning Resetting erases all the lock's data and its link to the app.

1. Remove the batteries.
2. Press and hold the reset button, and insert the batteries.
3. The light flashes blue five times. Keep holding until it turns red, then release.
4. A green light means the reset was successful.

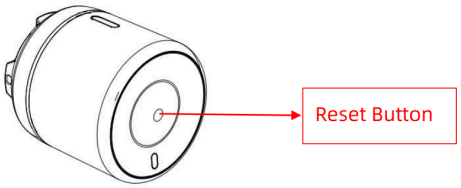

8 Troubleshooting

The lock does not lock from the app after installation
Check that the door's opening direction is set correctly in the app.

The door does not open in passage mode
Open the lock once with any method; passage mode takes effect after that.

The battery runs down fast
Possible causes are a high standby consumption or a short circuit.

The lock cannot be added to the app
Close the app and turn Bluetooth off and on, then try again. A lock that was added before must be reset first.